Work Order ID 107953

107953

October-07-13 9:03:04 AM

Item ID: 646.3812

Revision ID:

Item Name: Gusset Bracket

Start Date: 10/07/13 **Start Qty:** 10.00 *10*

Required Date: 10/07/13 **Req'd Qty:** 10.00 *10*

Reference:

Accept *N900040100*

Setup Start *NS1*

Stop *NS2*

Cust Item ID:

Customer:

Run Start *NR1*

Stop *NR2*

Approvals: **Process Plan:** MC5 **Date:** 13-10-09 **Tooling:** **Date:**

QC: **Date:** **SPC (Y/N):** **Date:**

Sequence ID/ Work Center ID	Operation Description	Set Up/ Run Hours	Tool ID	Tool #	Plan Code	Accept Qty	Reject Qty	Reject Number	Insp. Stamp
Draw Nbr	**Revision Nbr**								
646.3800	NC								
110	HAAS CNC VERTICAL MACHINING #1	0.00	DAS 44 9-89	13/11/06		10	Ø		
110 HAAS 1	**Memo**	0.00							
HAAS CNC vertical machine #1	1-Machine per DWG DWG REV: N/C								
	2- deburr and break all sharp edges								
120	QC2- Inspect parts off machine FAI/FAIB	0.00	DAS 44 9-89	13/11/06		10	Ø		
120 QC	**Memo**	0.00							
Quality Control									

DQA: _____ Date: _____

NCR: Yes / No

WORK ORDER NON-CONFORMANCE / UPDATE

QA Closed: Date:

Work Order: _____

Part No. _____

NCR No. _____

DISPOSITION

- Rework ☐
- Scrap ☐
- Use-as-is ☐
- Work Order Update ☐

AGAINST DEPARTMENT/PROCESS

Skid-tube ☐	Crosstube ☐	Water Jet ☐	Engineering ☐
Machining ☐	Small Fab ☐	Prod. Eng. Coor. ☐	Quality ☐
Thermoforming ☐	Finishing ☐	Rec/Store/Packaging ☐	Other ☐
Large Fab ☐	Composite ☐	Supplier ☐	☐

Root Cause		Date	Step	Qty	Description of work order update or Non-conformance	Initial Chief Eng	Action Description	Sign & Date	Verification	QC Inspector
Doc/Data	☐									
Equip/Tooling	☐									
Operator	☐									
Material	☐									
Setup	☐									
Other	☐									
Process	☐									
Supplier	☐									
Training	☐									
Unapproved	☐									

FAULT CATEGORY

Landing Gear

- ☐ Bending
- ☐ Centre Not Concentric to O/S
- ☐ Cracks
- ☐ Crushed/Crimped
- ☐ Cuffs
- ☐ Heat Treat
- ☐ Inspection Strip in Tube
- ☐ Ripples in Bend
- ☐ Torque Waves in Extrusion
- ☐ Turning Sequence
- ☐ Wave/Twist in Tube

General

- ☐ Bend
- ☐ BOM/Route
- ☐ Broken/Damaged
- ☐ Burrs
- ☐ Contamination
- ☐ Countersink
- ☐ Cut Too Short
- ☐ Drill Holes
- ☐ Drawing
- ☐ Finish
- ☐ Folio
- ☐ Grain
- ☐ Hardware
- ☐ Inspection Incomplete
- ☐ Instructions Incomplete/Unclear
- ☐ Maintenance
- ☐ Mislabeled
- ☐ Misread
- ☐ Offset
- ☐ Out of Calibration
- ☐ Out of Sequence
- ☐ Outside Dimensions
- ☐ Ovalized
- ☐ Over/Under tolerance
- ☐ Part Incorrect
- ☐ Part Lost/Missing
- ☐ Part Moved
- ☐ Positioned Wrong
- ☐ Power Loss/Surge
- ☐ Pressure/Forced
- ☐ Temperature/Cure
- ☐ Weld
- ☐ Wrong Stock Pulled
- ☐ Other

_____

_____

_____

Work Order ID 107953

October-07-13 9:03:04 AM

107953

Item ID: 646.3812 **Accept** *N900040100* **Setup Start** *NS1*

Revision ID: **Stop** *NS2*

Item Name: Gusset Bracket

Start Date: 10/07/13 **Start Qty:** 10.00 *10* **Cust Item ID:**

Required Date: 10/07/13 **Req'd Qty:** 10.00 *10* **Customer:**

Reference:

Run Start *NR1*

Approvals: **Process Plan:** _____ **Date:** _____ **Tooling:** _____ **Date:** _____ **Stop** *NR2*

QC: _____ **Date:** _____ **SPC (Y/N):** _____ **Date:** _____

Sequence ID/ Work Center ID	Operation Description	Set Up/ Run Hours	Tool ID	Tool #	Plan Code	Accept Qty	Reject Qty	Reject Number	Insp. Stamp
130	QC8- Inspect parts - second check	0.00							
130			CR 13/11/04			10	0		
QC	**Memo**	0.00							
Quality Control									
140	Outsource process-Anodize per QSI017 4.1.10.1	0.00							
140						CL 13/11/12	(10)		
Outsource4	**Memo**	0.00							
Outsource process - Anodize	Issue P/O to ATG : 22026								
	1- Black Anodize as per Dwg 646.3800								
	2- PRIME AS PER DWG, SEE NOTE #2								
	Certification of Comformity is required								
150	Receive & Inspect for Damage & Mat'l Certs	0.00							
150						13/11/20	(10)		
Packaging	**Memo**	0.00							
Packaging									

DQA: _____ Date: _____

NCR: Yes / No

WORK ORDER NON-CONFORMANCE / UPDATE

QA Closed: Date:

Work Order: _____

Part No. _____

NCR No. _____

DISPOSITION

- Rework ☐
- Scrap ☐
- Use-as-is ☐
- Work Order Update ☐

AGAINST DEPARTMENT/PROCESS

Skid-tube ☐	Crosstube ☐	Water Jet ☐	Engineering ☐
Machining ☐	Small Fab ☐	Prod. Eng. Coor. ☐	Quality ☐
Thermoforming ☐	Finishing ☐	Rec/Store/Packaging ☐	Other ☐
Large Fab ☐	Composite ☐	Supplier ☐	☐

Root Cause		Date	Step	Qty	Description of work order update or Non-conformance	Initial Chief Eng	Action Description	Sign & Date	Verification	QC Inspector
Doc/Data	☐									
Equip/Tooling	☐									
Operator	☐									
Material	☐									
Setup	☐									
Other	☐									
Process	☐									
Supplier	☐									
Training	☐									
Unapproved	☐									

FAULT CATEGORY

Landing Gear

- ☐ Bending
- ☐ Centre Not Concentric to O/S
- ☐ Cracks
- ☐ Crushed/Crimped
- ☐ Cuffs
- ☐ Heat Treat
- ☐ Inspection Strip in Tube
- ☐ Ripples in Bend
- ☐ Torque Waves in Extrusion
- ☐ Turning Sequence
- ☐ Wave/Twist in Tube

General

- ☐ Bend
- ☐ BOM/Route
- ☐ Broken/Damaged
- ☐ Burrs
- ☐ Contamination
- ☐ Countersink
- ☐ Cut Too Short
- ☐ Drill Holes
- ☐ Drawing
- ☐ Finish
- ☐ Folio
- ☐ Grain
- ☐ Hardware
- ☐ Inspection Incomplete
- ☐ Instructions Incomplete/Unclear
- ☐ Maintenance
- ☐ Mislabeled
- ☐ Misread
- ☐ Offset
- ☐ Out of Calibration
- ☐ Out of Sequence
- ☐ Outside Dimensions
- ☐ Ovalized
- ☐ Over/Under tolerance
- ☐ Part Incorrect
- ☐ Part Lost/Missing
- ☐ Part Moved
- ☐ Positioned Wrong
- ☐ Power Loss/Surge
- ☐ Pressure/Forced
- ☐ Temperature/Cure
- ☐ Weld
- ☐ Wrong Stock Pulled
- ☐ Other

_____

_____

_____

Work Order ID 107953

October-07-13 9:03:04 AM

107953

Item ID: 646.3812 **Accept** *N900040100* **Setup Start** *NS1*

Revision ID: **Stop** *NS2*

Item Name: Gusset Bracket

Start Date: 10/07/13 **Start Qty:** 10.00 *10* **Cust Item ID:**

Required Date: 10/07/13 **Req'd Qty:** 10.00 *10* **Customer:**

Reference:

Run Start *NR1*

Approvals: **Process Plan:** _____ **Date:** _____ **Tooling:** _____ **Date:** _____

Stop *NR2*

QC: _____ **Date:** _____ **SPC (Y/N):** _____ **Date:** _____

Sequence ID/ Work Center ID	Operation Description	Set Up/ Run Hours	Tool ID	Tool #	Plan Code	Accept Qty	Reject Qty	Reject Number	Insp. Stamp
155	QC5- Inspect part completeness to step on W/O	0.00				10			DAS 27 9-89 13/11/20
155 QC Quality Control	Memo	0.00							
180	Identify as per dwg & Stock Location: ST535	0.00				10X.			DAS 26 9-89 13-11-21
180 Packaging Packaging	Memo ***IDENTIFY AS PER APICAL MPP-120 BY STAMPING P# AND REV***	0.00							
190	QC21- Final Inspection - Work Order Release	0.00				13/11/21			
190 QC Quality Control	Memo	0.00							

UMF 13-11-21

DQA: _____ Date: _____

NCR: Yes / No

WORK ORDER NON-CONFORMANCE / UPDATE

QA Closed: Date:

Work Order: _____

Part No. _____

NCR No. _____

DISPOSITION

- Rework ☐
- Scrap ☐
- Use-as-is ☐
- Work Order Update ☐

AGAINST DEPARTMENT/PROCESS

Skid-tube ☐	Crosstube ☐	Water Jet ☐	Engineering ☐
Machining ☐	Small Fab ☐	Prod. Eng. Coor. ☐	Quality ☐
Thermoforming ☐	Finishing ☐	Rec/Store/Packaging ☐	Other ☐
Large Fab ☐	Composite ☐	Supplier ☐	☐

Root Cause		Date	Step	Qty	Description of work order update or Non-conformance	Initial Chief Eng	Action Description	Sign & Date	Verification	QC Inspector
Doc/Data	☐									
Equip/Tooling	☐									
Operator	☐									
Material	☐									
Setup	☐									
Other	☐									
Process	☐									
Supplier	☐									
Training	☐									
Unapproved	☐									

FAULT CATEGORY

Landing Gear

- ☐ Bending
- ☐ Centre Not Concentric to O/S
- ☐ Cracks
- ☐ Crushed/Crimped
- ☐ Cuffs
- ☐ Heat Treat
- ☐ Inspection Strip in Tube
- ☐ Ripples in Bend
- ☐ Torque Waves in Extrusion
- ☐ Turning Sequence
- ☐ Wave/Twist in Tube

General

- ☐ Bend
- ☐ BOM/Route
- ☐ Broken/Damaged
- ☐ Burrs
- ☐ Contamination
- ☐ Countersink
- ☐ Cut Too Short
- ☐ Drill Holes
- ☐ Drawing
- ☐ Finish
- ☐ Folio
- ☐ Grain
- ☐ Hardware
- ☐ Inspection Incomplete
- ☐ Instructions Incomplete/Unclear
- ☐ Maintenance
- ☐ Mislabeled
- ☐ Misread
- ☐ Offset
- ☐ Out of Calibration
- ☐ Out of Sequence
- ☐ Outside Dimensions
- ☐ Ovalized
- ☐ Over/Under tolerance
- ☐ Part Incorrect
- ☐ Part Lost/Missing
- ☐ Part Moved
- ☐ Positioned Wrong
- ☐ Power Loss/Surge
- ☐ Pressure/Forced
- ☐ Temperature/Cure
- ☐ Weld
- ☐ Wrong Stock Pulled
- ☐ Other _____

Picklist Print

October-07-13 9:03:04 AM

Work Order ID: 107953

Parent Item: 646.3812

Parent Item Name: Gusset Bracket

Start Date: 10/07/13 **Required Date:** 10/07/13

Start Qty: 10.00 **Required Qty:** 10.00

Comments: IPP REV:A NEW ISSUE 12-10-22 JLM VERIFIED:DD

Component Item ID/ Item Name	Replacement Item ID	Mfg/ Purch	Bin Item	Primary Location	Last Location	Route Seq ID	Unit of Measure	Qty on Hand	Qty per Kit	Total Qty	Qty Issued	Date Issued	Status
M7075T6A0.75X0.75X0.060X0.062 7075T6 ANGLE .75" X .75" X .060" X .062"W		Purchased	No				f	101.0500		**1**			

Location	Loc Qty	Loc Code
MAT036	101.05	
* 123947	101.05	

1.75' F.K 13/10/11/06

DQA: _____ Date: _____

NCR: Yes / No

WORK ORDER NON-CONFORMANCE / UPDATE

QA Closed: Date:

Work Order: _____

Part No. _____

NCR No. _____

DISPOSITION

- Rework ☐
- Scrap ☐
- Use-as-is ☐
- Work Order Update ☐

AGAINST DEPARTMENT/PROCESS

Skid-tube ☐	Crosstube ☐	Water Jet ☐	Engineering ☐
Machining ☐	Small Fab ☐	Prod. Eng. Coor. ☐	Quality ☐
Thermoforming ☐	Finishing ☐	Rec/Store/Packaging ☐	Other ☐
Large Fab ☐	Composite ☐	Supplier ☐	☐

Root Cause		Date	Step	Qty	Description of work order update or Non-conformance	Initial Chief Eng	Action Description	Sign & Date	Verification	QC Inspector
Doc/Data	☐									
Equip/Tooling	☐									
Operator	☐									
Material	☐									
Setup	☐									
Other	☐									
Process	☐									
Supplier	☐									
Training	☐									
Unapproved	☐									

FAULT CATEGORY

Landing Gear

- ☐ Bending
- ☐ Centre Not Concentric to O/S
- ☐ Cracks
- ☐ Crushed/Crimped
- ☐ Cuffs
- ☐ Heat Treat
- ☐ Inspection Strip in Tube
- ☐ Ripples in Bend
- ☐ Torque Waves in Extrusion
- ☐ Turning Sequence
- ☐ Wave/Twist in Tube

General

- ☐ Bend
- ☐ BOM/Route
- ☐ Broken/Damaged
- ☐ Burrs
- ☐ Contamination
- ☐ Countersink
- ☐ Cut Too Short
- ☐ Drill Holes
- ☐ Drawing
- ☐ Finish
- ☐ Folio
- ☐ Grain
- ☐ Hardware
- ☐ Inspection Incomplete
- ☐ Instructions Incomplete/Unclear
- ☐ Maintenance
- ☐ Mislabeled
- ☐ Misread
- ☐ Offset
- ☐ Out of Calibration
- ☐ Out of Sequence
- ☐ Outside Dimensions
- ☐ Ovalized
- ☐ Over/Under tolerance
- ☐ Part Incorrect
- ☐ Part Lost/Missing
- ☐ Part Moved
- ☐ Positioned Wrong
- ☐ Power Loss/Surge
- ☐ Pressure/Forced
- ☐ Temperature/Cure
- ☐ Weld
- ☐ Wrong Stock Pulled
- ☐ Other _____

DART AEROSPACE LTD	Work Order:	107953
Description: GUSSET BRACKET	Part Number:	646.3812
Inspection Dwg: 646.3800 Rev: N/C		Page 1 of 1

FIRST ARTICLE INSPECTION CHECKLIST

Drawing Dimension	Tolerance	Actual Dimension	Accept	Reject	Method of Inspection	Comments
2.00	+/- .005	2.001	✓		FK-04	Vern.
.75	+/- .030	.751	✓		"	"
.06	+/- .030	.065	✓		"	"
R .06	+/- .030	.063	✓		R-G	
.31	+/- .030	.313	✓		FK-04	Vern.
.38	+/- .030	.3675	✓		"	"
1.25	+/- .030	1.253	✓		"	"
Ø .09	+.004 /- .001	.089	✓		"	"

Measured by:	DAS 44	Audited by:		Preliminary Approval:	
Date:	13/11/06	Date:	13/11/06	Date:	

Rev	Date	Change	Revised by	Approved
E	10.04.14	Added preliminary approval	KJ	

10.04.15

APICAL INDUSTRIES, INC.	ENGINEERING CHANGE NOTICE NO. 03697				SHEET 1 OF 1
	DWG NO. 646.3800	REV: N/C	PREPARED BY B. PETERS	DATE: 11/14/12	EFFECT ON DWG ☐ INC. ☒ UNINC.
	DWG TITLE: BRACKETS				
	APPROVED BY: ENGR	MFG David Barbon	QC		EFF: NEXT ORDER
TRANSACTION CODES (TC): A-ADD C-CREATE R-REVISE D-DELETE	REASON: ADDED ALTERNATE MATERIAL.			ECR: D-12-006	

IS

1 PRIMARY MATERIAL: 7075-T651 ALUMINUM PER AMS-QQ-A-250/12.
ALTERNATE MATERIAL: 7075-T6511 ALUMINUM PER AMS-QQ-A-200/11.

SHEET 1, ZONE A2 IS:

107953 MLJ
13-10-09

F/N	TC	PART NUMBER	QTY	DESCRIPTION	MATERIAL	SPECIFICATION

DOCUMENTS EFFECTED:	CHANGE CATEGORY	DER REVIEW REQUIRED
☐ RFMS ☐ MDL ☐ INSTALL INSTRUC ☐ ICA ☐ BOM	☐ MAJOR ☒ MINOR	☐ YES ☒ NO

107953

THE INFORMATION CONTAINED IN THIS DRAWING IS THE SOLE PROPERTY OF APICAL INDUSTRIES. ANY REPRODUCTION IN PART OR WHOLE WITHOUT THE WRITTEN PERMISSION OF APICAL INDUSTRIES IS PROHIBITED

REVISIONS			
REV	DESCRIPTION	DATE	APPROVED

NOTES:

1. MATERIAL: ALUMINUM 7075-1651 AMS-QQ-A-250/12
2. FINISH: HARD ANODIZE IAW MIL-A-8625 TYPE III, CLASS 2. COLOR BLACK; CARDINAL 4860-50 PRETREATMENT PRIMER PRIME IAW MIL-P-23377J TYPE I CLASS N
3. DEBURR AND BREAK ALL SHARP EDGES
4. IDENTIFY IAW MPP-120

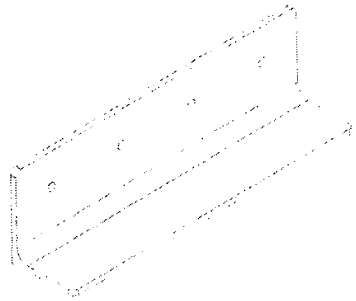

646.3810

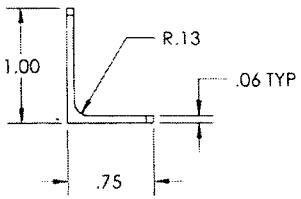

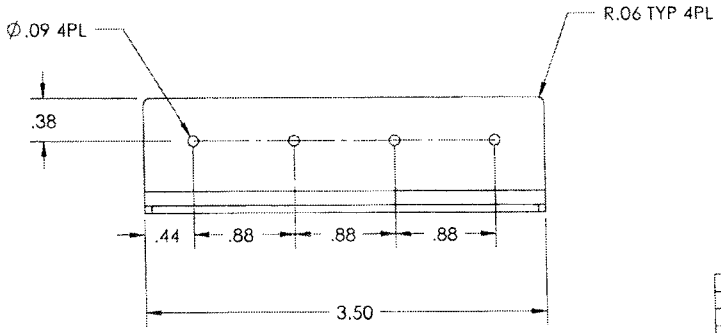

UNINCORPORATED E[illegible]

03697

QTY	FIND #	PART #	DESCRIPTION	MAT'L	SPEC.
		646.3814	WIPER BRACKET	1	2
		646.3813	STRUT BRACKET	1	2
		646.3812	GUSSET BRACKET	1	2
		646.3811	RADIUS BLOCK	1	2
		646.3810	BRACKET	1	2

PARTS LIST

NEXT ASSY (S): 646 4000

DESIGN DATE: 08-19-05
DRAWN BY: J DONNER
CHECKED: P BRAVO
DRAWING APPROVAL: P BRAVO 08/19/05
CONTRACT NO.

UNLESS OTHERWISE SPECIFIED DIMENSIONS ARE IN INCHES
TOLERANCES ARE:
2 PLACE DECIMALS ±.015
3 PLACE DECIMALS ±.005
ANGLES ± 3°

APICAL INDUSTRIES
2608 TEMPLE HEIGHTS DR.
OCEANSIDE, CA. 92056-3512 (760)724-5300

BRACKETS

SIZE	CAGE CODE	DWG NO	REV
B	07M76	646.3800	N/C

SCALE NONE — SHEET 1 OF 5

107953

THE INFORMATION CONTAINED IN THIS DRAWING IS THE SOLE PROPERTY OF APICAL INDUSTRIES. ANY REPRODUCTION IN PART OR WHOLE WITHOUT THE WRITTEN PERMISSION OF APICAL INDUSTRIES IS PROHIBITED

REVISIONS			
REV	DESCRIPTION	DATE	APPROVED

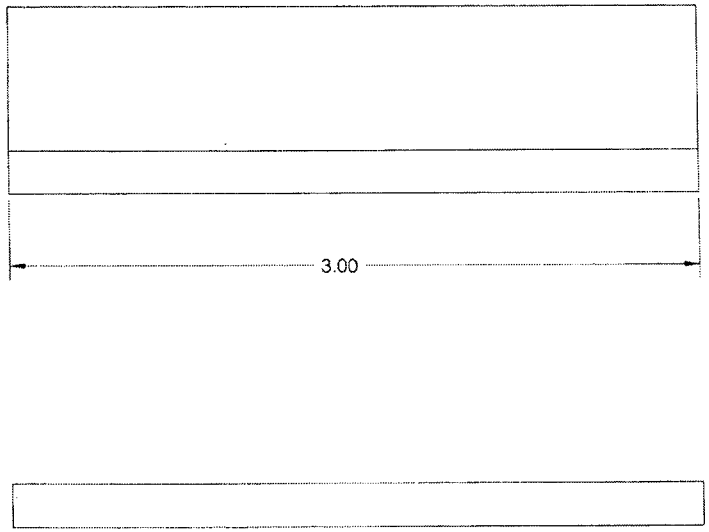

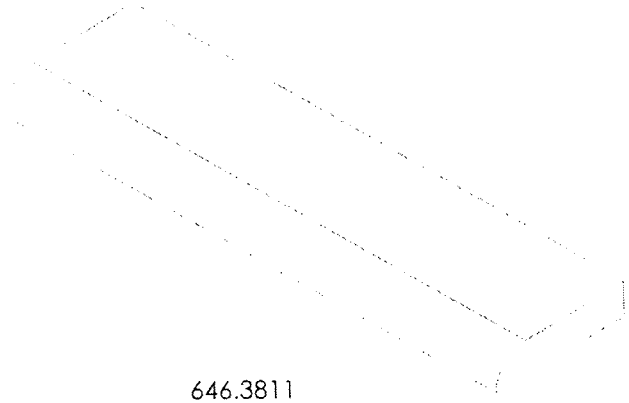

NEXT ASSY (S)	ORIGINAL DATE 06-19-08	APICAL INDUSTRIES 2608 TEMPLE HEIGHTS DR. OCEANSIDE, CA. 92056-3512 (760)724-5300
	DRAWN BY J.GARDNER / CHECKED	BRACKETS
	DRAWING APPROVAL	
	CONTRACT NO	
	UNLESS OTHERWISE SPECIFIED DIMENSIONS ARE IN INCHES TOLERANCES ARE: 2 PLACE DECIMAL: ±.010 3 PLACE DECIMAL: ±.005 ANGLES: ±.5°	SIZE B / CAGE CODE 07M76 / DWG NO 646.3800 / REV N/C SCALE NONE / SHEET 2 OF 5

107953

THE INFORMATION CONTAINED IN THIS DRAWING IS THE SOLE PROPERTY OF APICAL INDUSTRIES AND IS NOT TO BE USED IN PART OR WHOLE WITHOUT THE WRITTEN PERMISSION OF APICAL INDUSTRIES IS PROHIBITED

REVISIONS

REV	DESCRIPTION	DATE	APPROVED

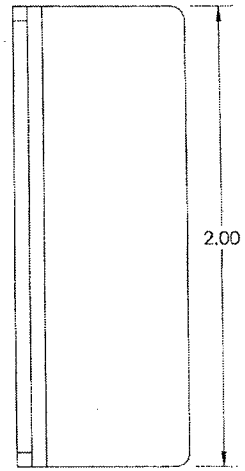

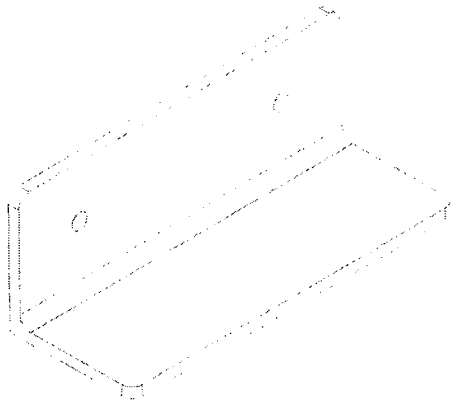

646.3812

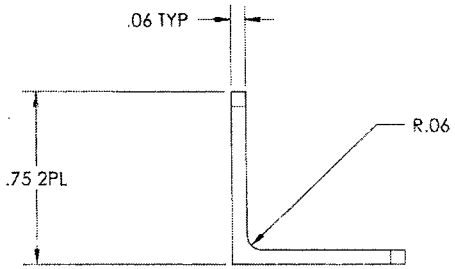

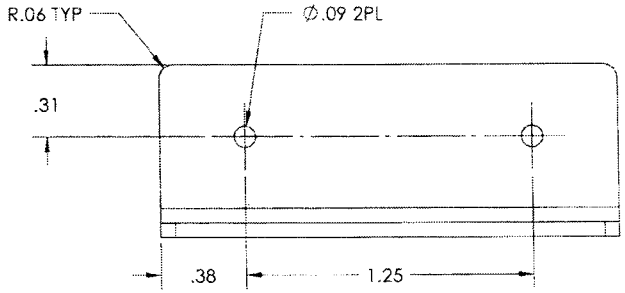

NEXT ASSY (S)	ORIGINAL DATE (MO-DAY-YR) 08-19-08	APICAL INDUSTRIES 2608 TEMPLE HEIGHTS DR. OCEANSIDE, CA. 92056-3512 (760)724-5300
	DRAWN BY J. GARDNER / CHECKED	
	DRAWING APPROVAL	BRACKETS
	CONTRACT No.	
	UNLESS OTHERWISE SPECIFIED DIMENSIONS ARE IN INCHES TOLERANCES ARE 2 PLACE DECIMALS ±.010 3 PLACE DECIMALS ±.005 ANGLES ± .5°	SIZE B · CAGE CODE 07MZ6 · DWG NO 646.3800 · REV N/C SCALE NONE · SHEET 3 OF 5

107953

THE INFORMATION CONTAINED IN THIS DRAWING IS THE SOLE PROPERTY OF APICAL INDUSTRIES. ANY REPRODUCTION IN PART OR WHOLE WITHOUT THE WRITTEN PERMISSION OF APICAL INDUSTRIES IS PROHIBITED.

REVISIONS			
REV	DESCRIPTION	DATE	APPROVED

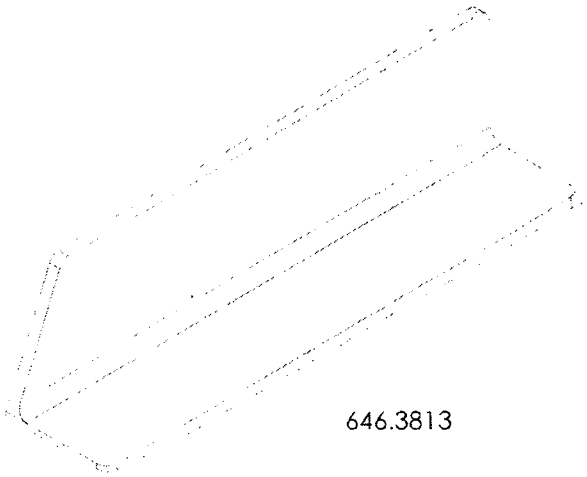

646.3813

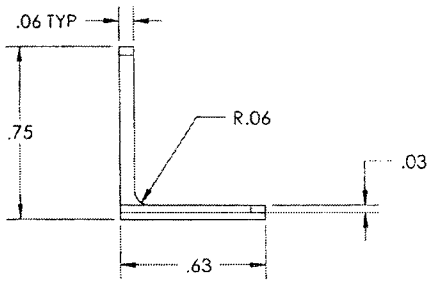

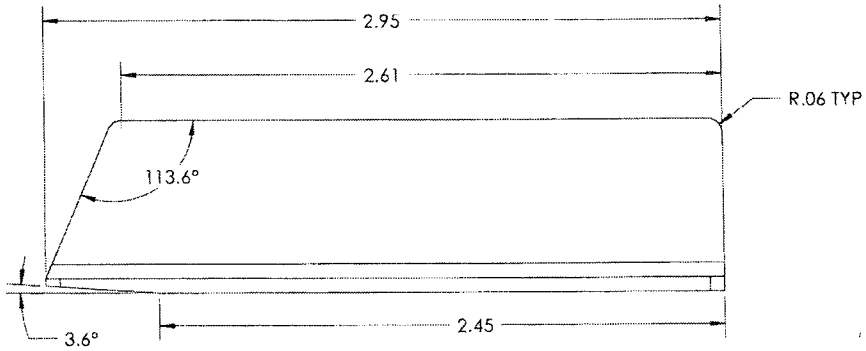

NEXT ASSY (S)	ORIGINAL DRAFT INITIAL DATE: 08-19-08	APICAL INDUSTRIES 2608 TEMPLE HEIGHTS DR. OCEANSIDE, CA. 92056-3512 (760)724-5300
	DRAWN BY:	CHECKED:
	ISSUED BY:	
	DRAWING APPROVAL:	
	COMPANY PIN:	BRACKETS
	UNLESS OTHERWISE SPECIFIED DIMENSIONS ARE IN INCHES TOLERANCES ARE: 2 PLACE DECIMALS ±.010 3 PLACE DECIMALS ±.005 ANGLES ± 3°	SIZE B · CAGE CODE 07MZ6 · DWG NO. 646.3800 · REV N/C SCALE NONE · SHEET 4 OF 5

107953

THE INFORMATION CONTAINED IN THIS DRAWING IS THE SOLE PROPERTY OF APICAL INDUSTRIES. ANY REPRODUCTION IN PART OR WHOLE WITHOUT THE WRITTEN PERMISSION OF APICAL INDUSTRIES IS PROHIBITED.

REVISIONS

REV	DESCRIPTION	DATE	APPROVED

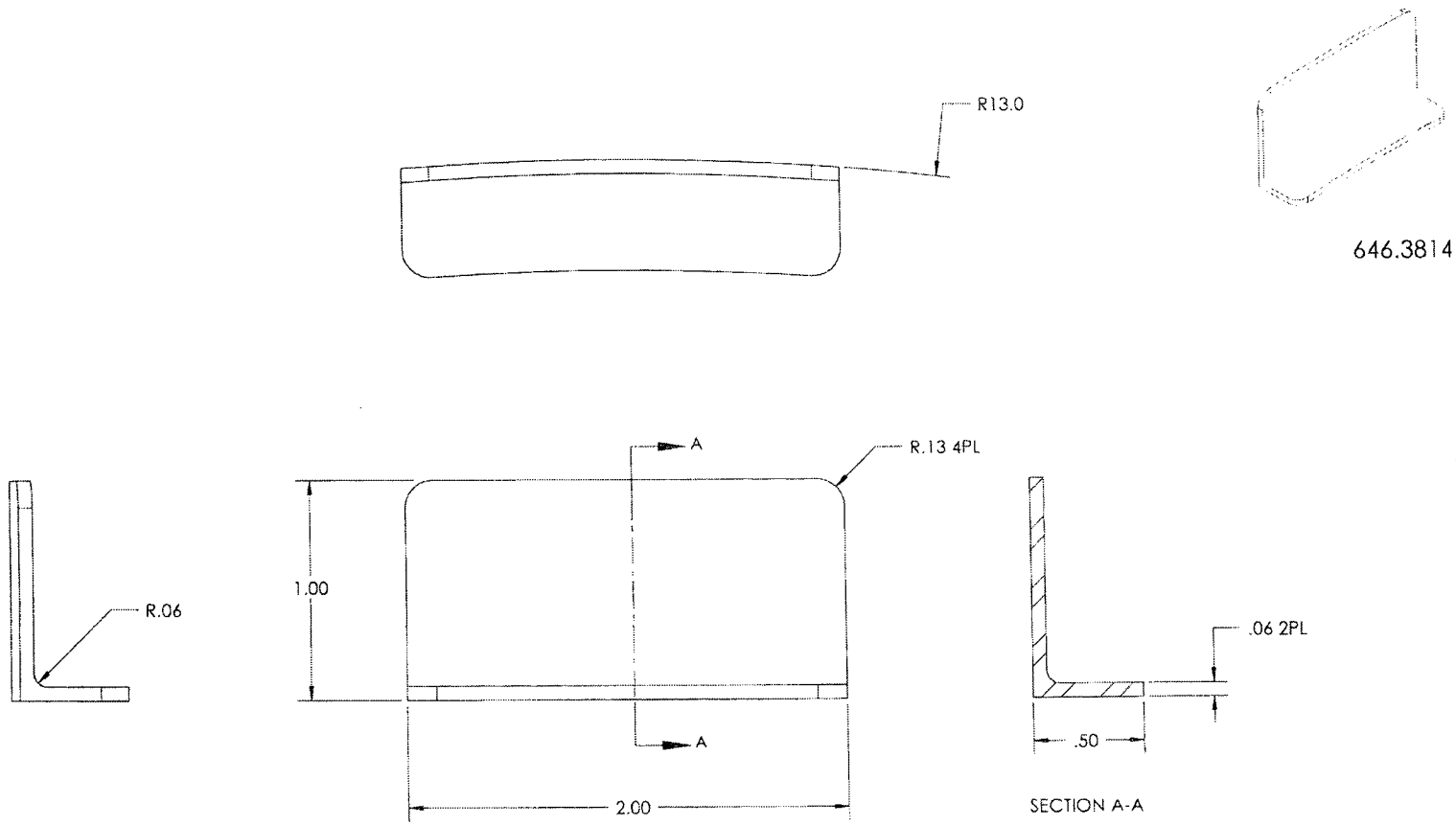

NEXT ASSY (S)	ORIGINAL DATE (MO-DA-YR) 08-15-08	APICAL INDUSTRIES 2608 TEMPLE HEIGHTS DR. OCEANSIDE, CA. 92056-3512 (760)724-5300
	DRAWN BY J.GARDNER / DIRECTOR	
	DRAWING APPROVAL	BRACKETS
	CONTRACT NO	
	UNLESS OTHERWISE SPECIFIED DIMENSIONS ARE TO FINISHED TOLERANCES ARE: 2 PLACE DECIMALS ±.010 3 PLACE DECIMALS ±.005 ANGLES ± 2°	REV B · CAGE CODE 07MZ6 · DWG NO 646.3800 · REV N/C SCALE NONE · SHEET 5 OF 5

A.T.G. Industries Inc.
731, rue Industrielle Rd.
PLATING DEPARTMENT
Rockland, On K4K 1T2
Canada
Ph: (613) 446-4544
Fax: (613) 446-4556

ATG INDUSTRIES INC.

Pack List

Number: 62747 Date: 19-Nov-13

To

DART AEROSPACE LTD
1270 ABERDEEN ST.
HAWKESBURY, ON K6A 1K7
Canada

Ph: 613-632-5200 Fax: 613-632-1185

Ship To

DART AEROSPACE LTD
1270 ABERDEEN ST.
HAWKESBURY, ON K6A 1K7
Canada

Ph: 613-632-5200 Fax: 613-632-1185

Terms	Ship Via

Quantity	Description
1 lot	Part: ASST Rev: 10 PCS 646.3912 (5.90) 4 PCS 646.3810 (6.55) 8 PCS 649.5310 (12.65) HARD ANODIZE BLACK MIL-A-8625 TYPE III CLASS 2 PRIME MIL-P-23377J TYPE I CLASS N PRICE IS PER PIECE Job: 20130715 PO: 22026 Line:
	Certificate of Conformance A.T.G. Industries certifies that all items in this shipment are in conformance with all requirements, specifications and drawings referenced in the purchase order. ISO 9001 : 2008 REGISTERED ATG SALES-2010 TERMS APPLY DATE : 19/11/13 CERTIFIED SIGNATURE : _____ RECEIVER SIGNATURE : _____